MULTITEL
SINCE 1911

# HX 200 EX

| | | |
|---|---|---|
| 19,90 m | 17,90 m | 9,60 m (225 kg) |
| 225 kg | 1,40x0,70x1,10 m | 65°+65° |
| 380° | EX<br>Stabilizzatori a estensione laterale idraulica<br>Stabs par vérins extensibles hydrauliquement<br>Laterally extensible hydraulic stabilizers<br>H-Abstützung | 3,5 t |

# HX 20 EX

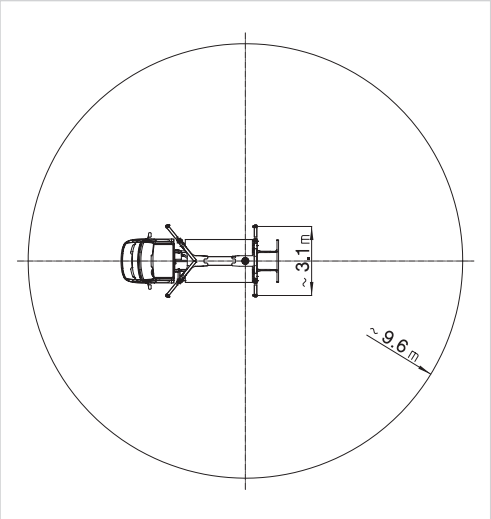


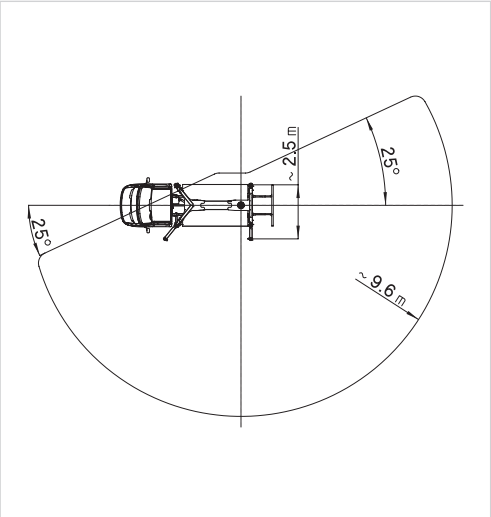


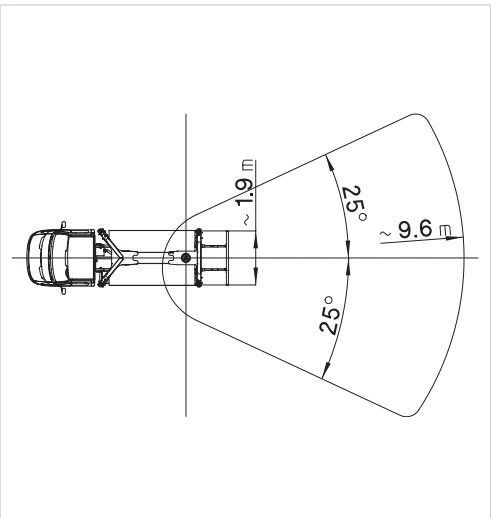


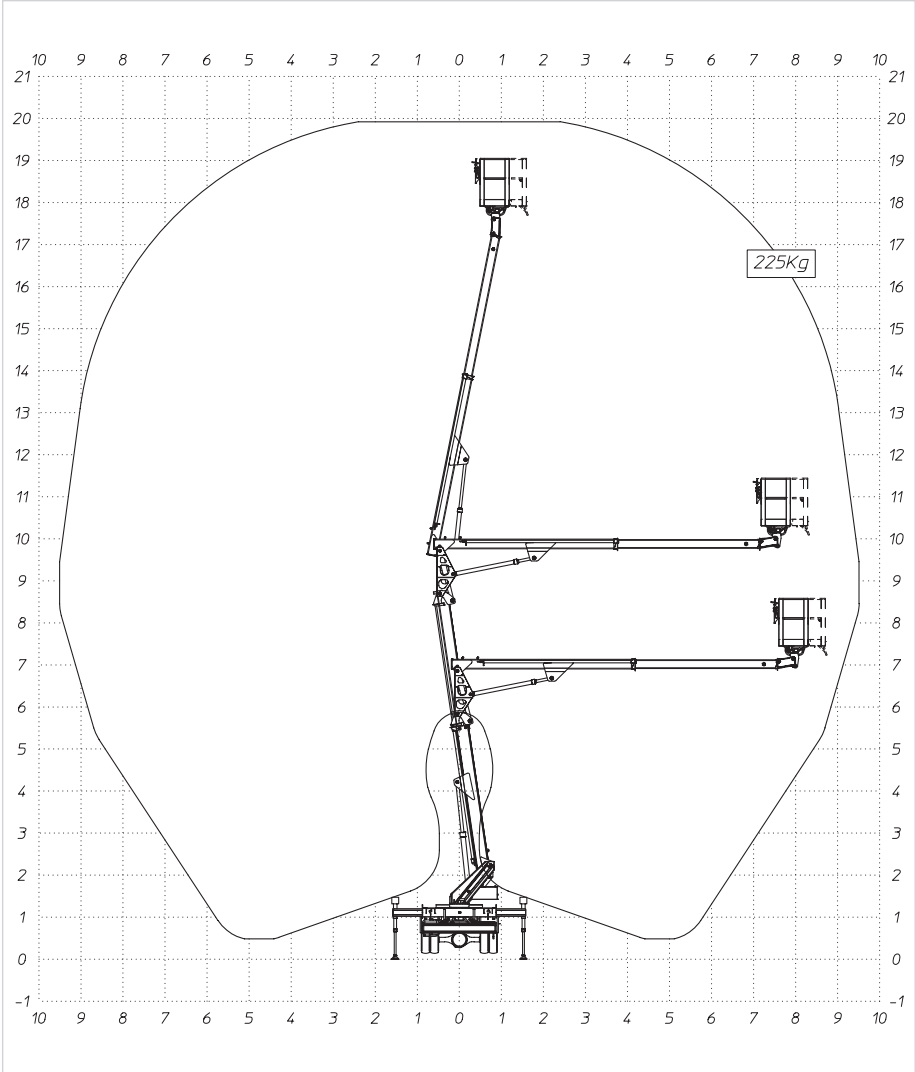


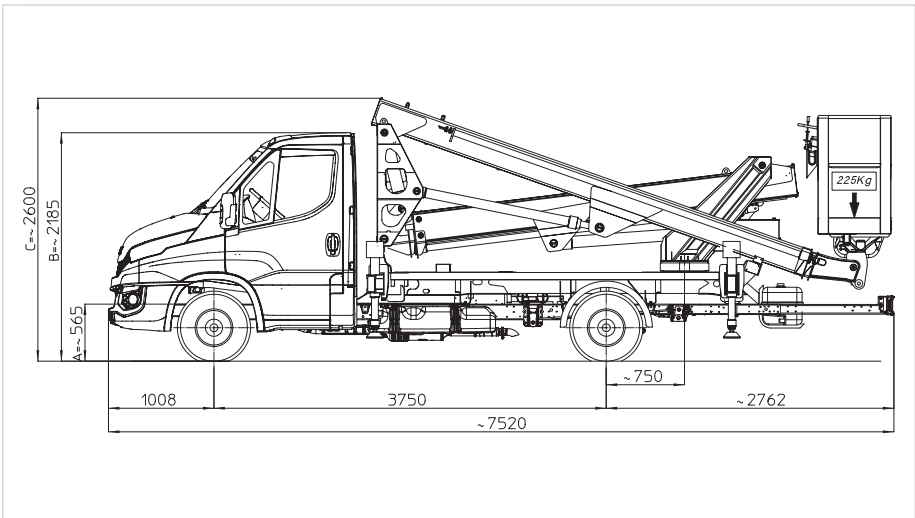


IRONIKA

**DORN LIFT GMBH** • Unterer Schützenweg 2, A-6923 Lauterach, T: +43 (0) 5574/736 88, F: +43 (0) 5574/736 88 99, www.dornlift.com, office@dornlift.com
UID-ATU 38909400, LG Feldkirch, FN 133560m

DORN ARBEITSBÜHNEN